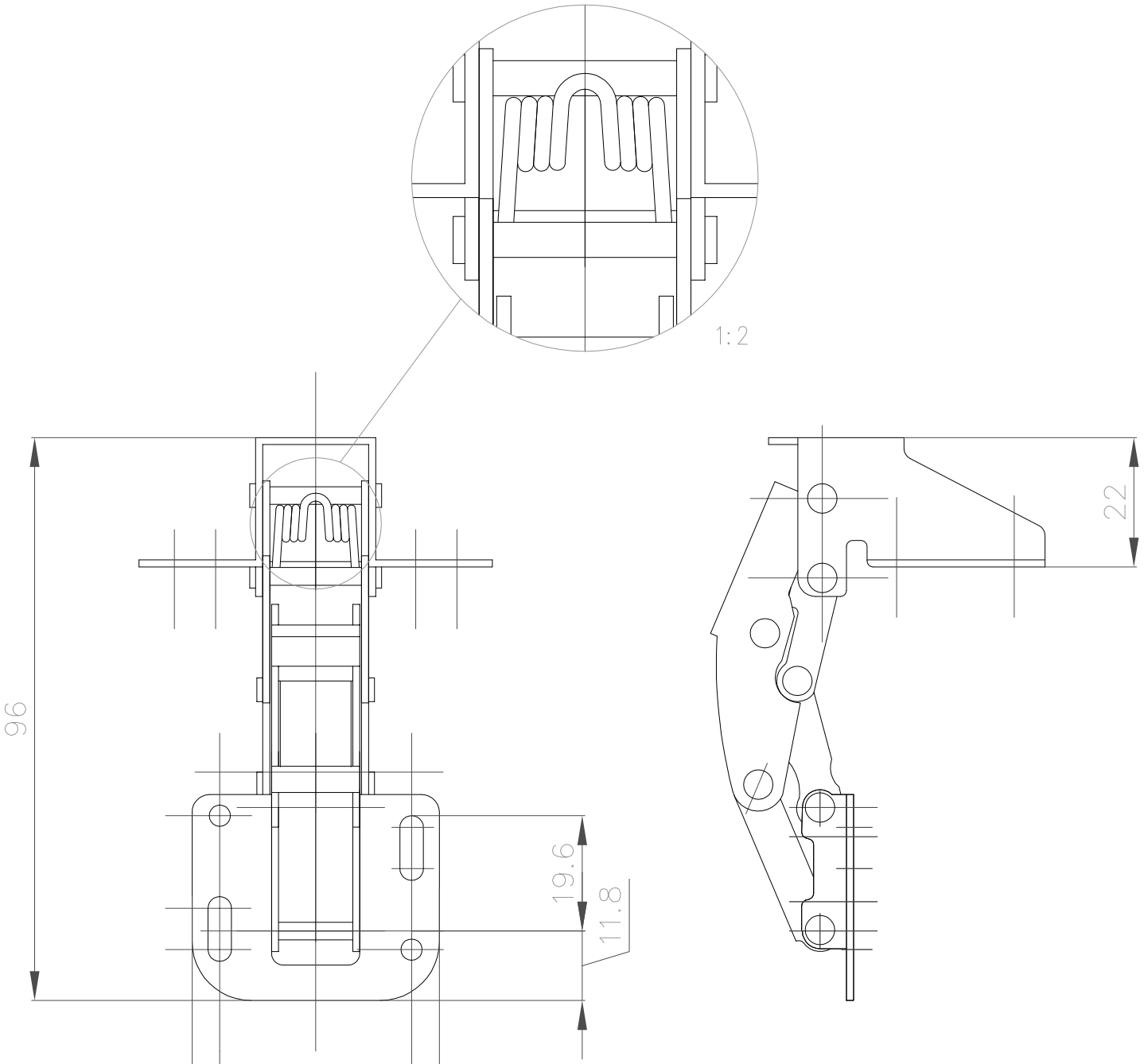

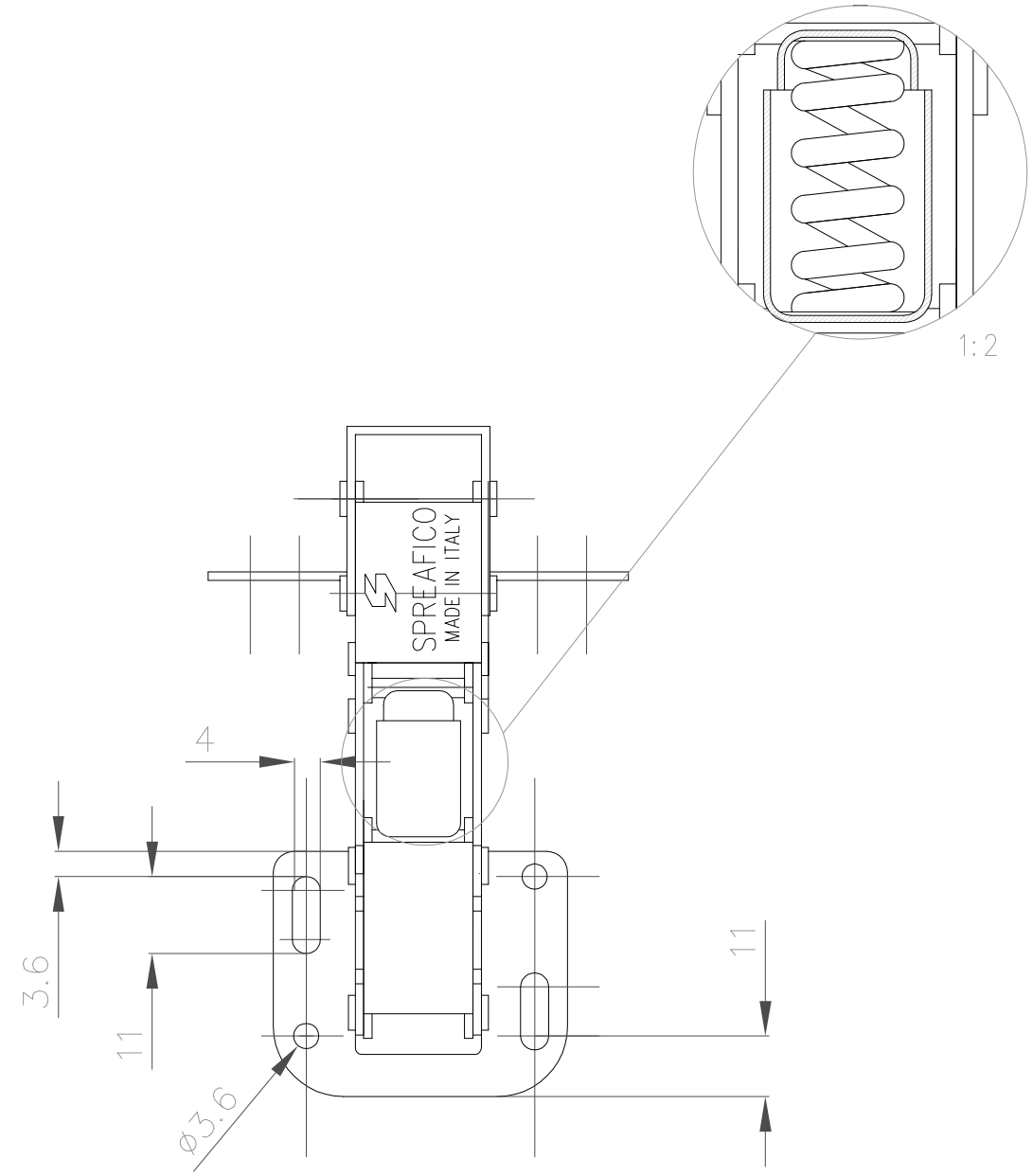

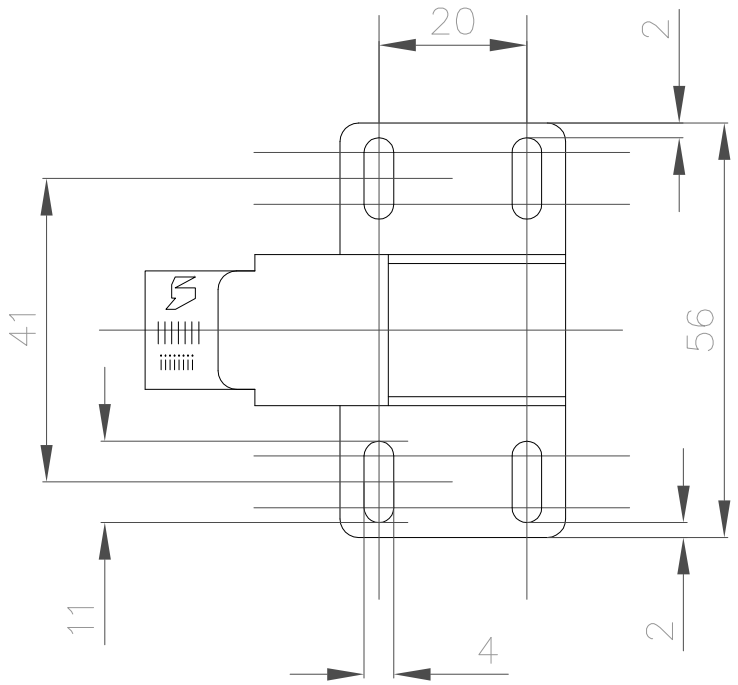

General Tolerance 0,2mm

Surface Finish 3,6

Spreafico Cerniere srl

PRODUZIONE CERNIERE E FERRAMENTA PER MOBILI
HINGES & FURNITURE IRONMONGERY MANUFACTURER

REV.	DATA	DESCRIPTION	Designed	Verif./Approv.
C				
B				
A	27.09.'10	Caravan hinge ART.354/16	G.	

GENERAL TOLERANCE ±0.2 PRECISION DEGREE UNI ISO 2768

TITOLO Cerniera tipo Caravan
Caravan Type Hinge
ART.354/16

SCALA 1:1

DRAWING N°

SHEET 1

THIS DRAWING IS PROPERTY OF SPREAFICO CERNIERE,PROTECTED BY LAW–REPRODUCTION PROHIBITED